CL.1 Deck valve anti-clockwise closing hot - Chrome

20 006 706 Product version from 3/9/2015

- with CASCADE structure
- hole diameter 32 mm
- rosette 60 x 47 mm
- with hot marking
- WRAS

Chrome	20 006 706-00
Brushed Platinum	20 006 706-06
Dark Chrome	20 006 706-19
Brushed Champagne (22kt Gold)	20 006 706-46
Champagne (22kt Gold)	20 006 706-47
Brushed Dark Platinum	20 006 706-99

We reserve the right to change designs, product range and technical specifications without prior notice.
More information can be found at: www.dornbracht.com +49 (0) 2371 8899 900 mail@dornbracht.com

CL.1 Deck valve anti-clockwise closing hot - Chrome

20 006 706 Product version from 3/9/2015

mm [inches]

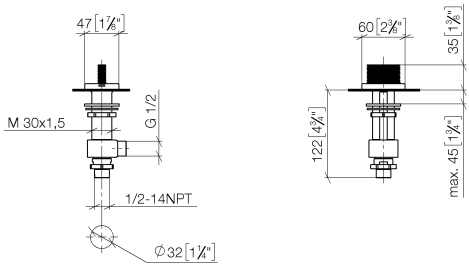

Flow rate chart

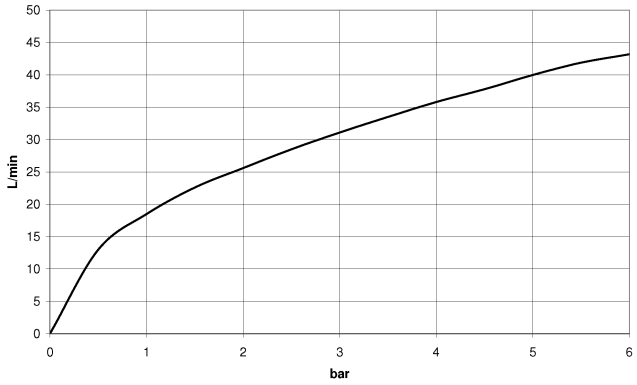

Codes & Standards

DIN 4109	ISO 3822	NSF372	NSF61
Scottish Water Byelaws	UK Water Supply Regulations	Ü-Zeichen	

CL.1 Deck valve anti-clockwise closing hot - Chrome

20 006 706 Product version from 3/9/2015

Certificates

WRAS_1804	IAPMO_N-4	LGA_28	IAPMO_6	WRAS_240202

We reserve the right to change designs, product range and technical specifications without prior notice.
More information can be found at: www.dornbracht.com +49 (0) 2371 8899 900 mail@dornbracht.com

CL.1 Deck valve anti-clockwise closing hot - Chrome

20 006 706 Product version from 3/9/2015

Parts for other finishes can be found here: Brushed Platinum

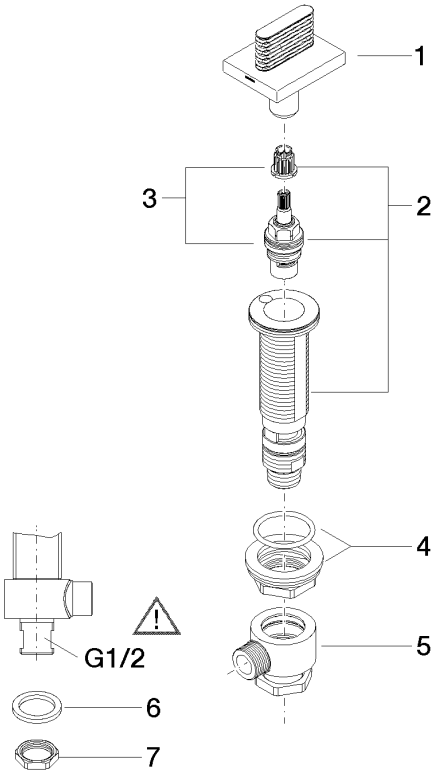

Spare parts list

No.	Item Number	Name	Quantity used	Delivery time
1	90 20 70 053 07-00	handle (hot)	1	10
2	04 17 11 058 52 90	side panel	1	2
3	90 90 03 152 00 90	top	1	2
4	04 23 10 032 78 90	fixing set	1	2
5	04 17 11 023 10 90	distributor	1	2
6	90 23 30 040 00-00	threaded connector	1	10
7	09 30 11 059 90	disc	1	2
8	09 23 10 012 90	nut	1	2

We reserve the right to change designs, product range and technical specifications without prior notice.
More information can be found at: www.dornbracht.com +49 (0) 2371 8899 900 mail@dornbracht.com